Notes :

1. HEAD STYLE: HEX WASHER HEAD
2. SCREW TYPE: SELF DRILLING SCREW
3. WASHER TYPE: SEALING WASHER
4. MATERIAL: CARBON STEEL
5. WASHER MATERIAL: STAINLESS STEEL
6. FINISH: STALGARD COATING
7. STANDARD: ANSI B18.6.4

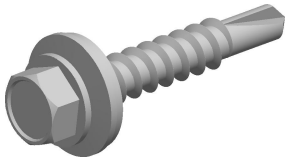

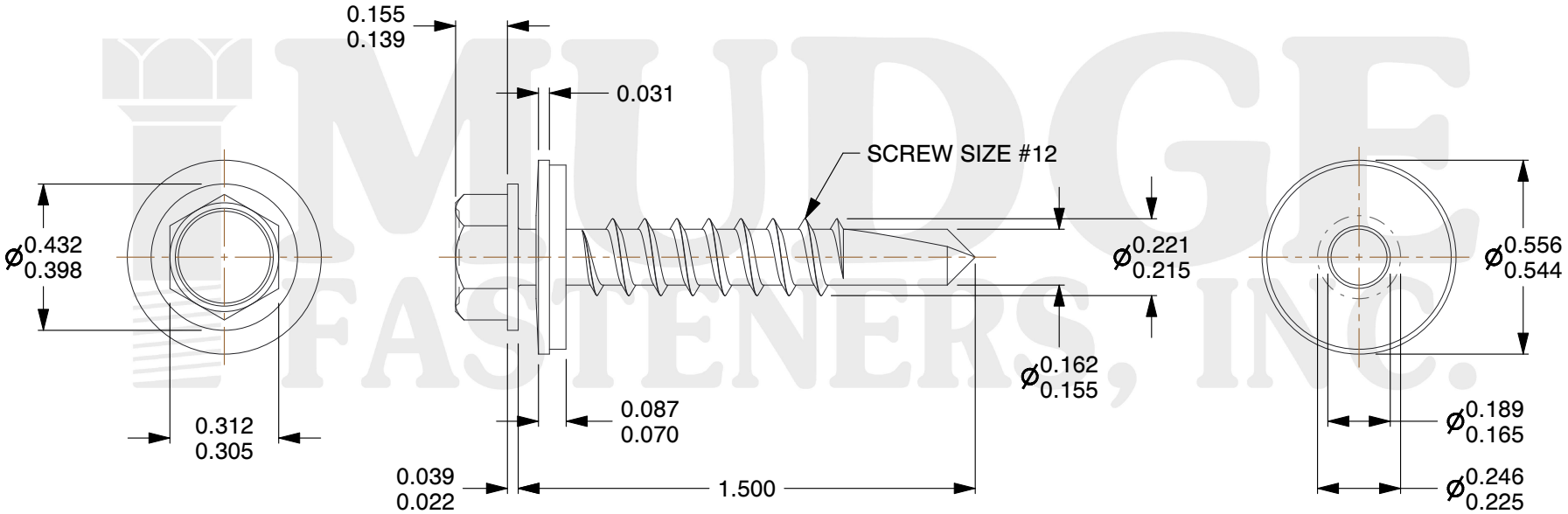

MUDGE FASTENERS, INC.

www.mudgefasteners.com

This file and any associated information and specifications are provided for reference and evaluation purposes only and are subject to change without notice. Mudge Fasteners makes no representations, warranties, or guarantees as to the appropriateness, accuracy, completeness, or suitability for any purpose of the file, information, or specification. You are solely responsible for the use of the file, information, and specifications.

This drawing is the property of Mudge Fasteners. It contains confidential proprietary information that is Mudge Fasteners property. Do not disclose to or duplicate for others except as authorized by Mudge Fasteners.

COMPONENT DESCRIPTION	12X1-1/2 HEX WASHER SELF-DRILL #2 BI-FLEX W/STALGARD W/STAINLESS SEALING WASHER	**UNIT** INCH
		SHEET 1 of 1
PART NUMBER	137BFSS12T1502SG	**SCALE**
MATERIAL	CARBON STEEL	2.100