Notes :

1. HEAD STYLE: HEX WASHER HEAD
2. DRIVE STYLE: SLOT
3. THREAD TYPE: TYPE A
4. MATERIAL: STAINLESS STEEL
5. STANDARD: ANSI B18.6.4

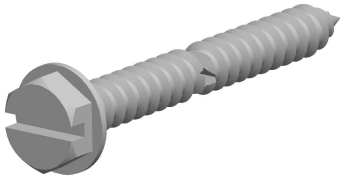

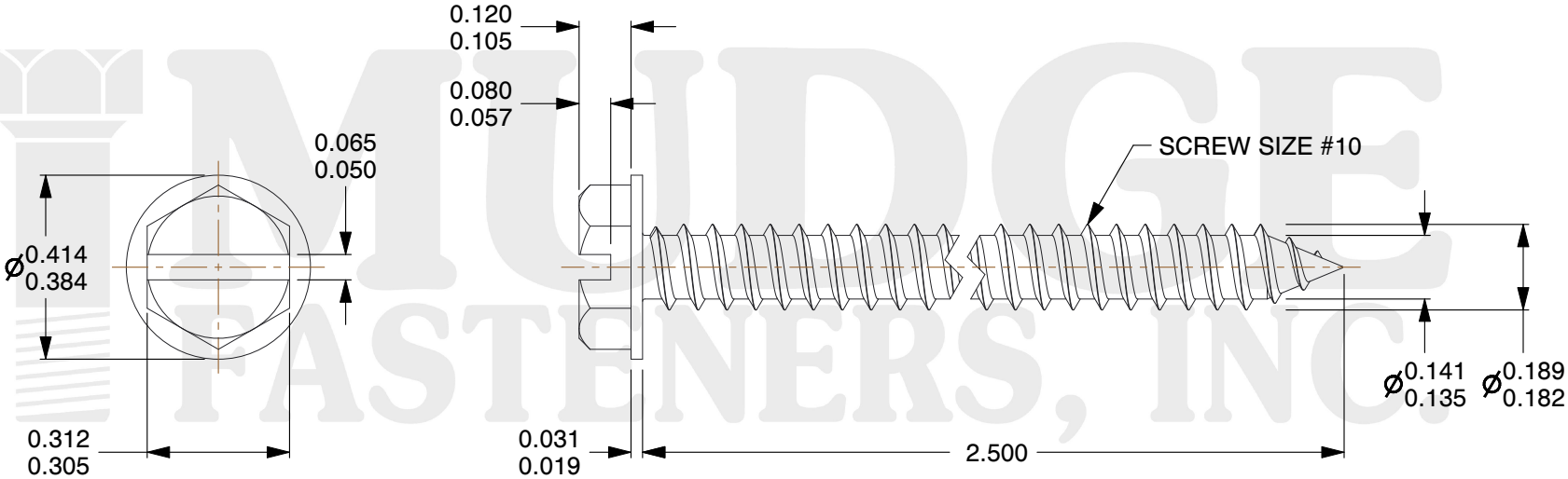

MUDGE FASTENERS, INC.

MUDGE FASTENERS, INC.

www.mudgefasteners.com

This file and any associated information and specifications are provided for reference and evaluation purposes only and are subject to change without notice. Mudge Fasteners makes no representations, warranties, or guarantees as to the appropriateness, accuracy, completeness, or suitability for any purpose of the file, information, or specification. You are solely responsible for the use of the file, information, and specifications.

This drawing is the property of Mudge Fasteners. It contains confidential proprietary information that is Mudge Fasteners property. Do not disclose to or duplicate for others except as authorized by Mudge Fasteners.

COMPONENT DESCRIPTION	#10X2-1/2 SLOT HEX WASHER HEAD SMS STAINLESS STEEL #1 (.0005 INCH THICK)	**UNIT**
		INCH
		SHEET
		1 of 1
PART NUMBER	11110A250SS	**SCALE**
MATERIAL	STAINLESS STEEL	2.577